Computer Networks

Fall 2024 Semester

Course Code: CS – 3001

Offered to BCS22 – 5K, BDS21 – 7C

Course Instructor: Aftab Alam

Network Layer

Lecture 18

Example

An ISP is granted a block of addresses starting with 190.100.0.0/16 (65,536 addresses). The ISP needs to distribute these addresses to three groups of customers as follows:

a. The first group has 64 customers; each needs 256 addresses.

b. The second group has 128 customers; each needs 128 addresses.

c. The third group has 128 customers; each needs 64 addresses.

Design the sub-blocks and find out how many addresses are still available after these allocations.

Group 1

For this group, each customer needs 256 addresses.

This means that 8 ($\log_2 256$) bits are needed to define each host.

The prefix length is then 32 − 8 = 24.

1st Customer:	*190.100.0.0/24*	*190.100.0.255/24*
2nd Customer:	*190.100.1.0/24*	*190.100.1.255/24*
. . .		
64th Customer:	*190.100.63.0/24*	*190.100.63.255/24*

Total = 64 × 256 = 16,384

X.X.00000000.x
X.X.00000001.x
…
X.X.00111111.x

Group 2

For this group, each customer needs 128 addresses. This means that 7 ($\log_2 128$) bits are needed to define each host. The prefix length is then 32 − 7 = 25. The addresses are

1st Customer:	*190.100.64.0/25*	*190.100.64.127/25*
2nd Customer:	*190.100.64.128/25*	*190.100.64.255/25*
. . .		
128th Customer:	*190.100.127.128/25*	*190.100.127.255/25*

$Total = 128 \times 128 = 16{,}384$

X.X.01000000.0-------
X.X.01000000.1-------
…
X.X.01111111. 0-------
X.X.01111111. 1-------

Group 3

For this group, each customer needs 64 addresses. This means that 6 ($\log_2 64$) bits are needed to each host. The prefix length is then 32 − 6 = 26. The addresses are

1st Customer:	*190.100.128.0/26*	*190.100.128.63/26*
2nd Customer:	*190.100.128.64/26*	*190.100.128.127/26*
. . .		
128th Customer:	*190.100.159.192/26*	*190.100.159.255/26*
Total = 128 × 64 = 8192		

X.X.10000000. 00------
X.X.10000000. 01------
X.X.10000000. 10------
X.X.10000000. 11------
…
X.X.10011111. 10-------
X.X. 10011111. 11-------

Number of granted addresses to the ISP: 65,536
Number of allocated addresses by the ISP: 40,960
Number of available addresses: 24,576

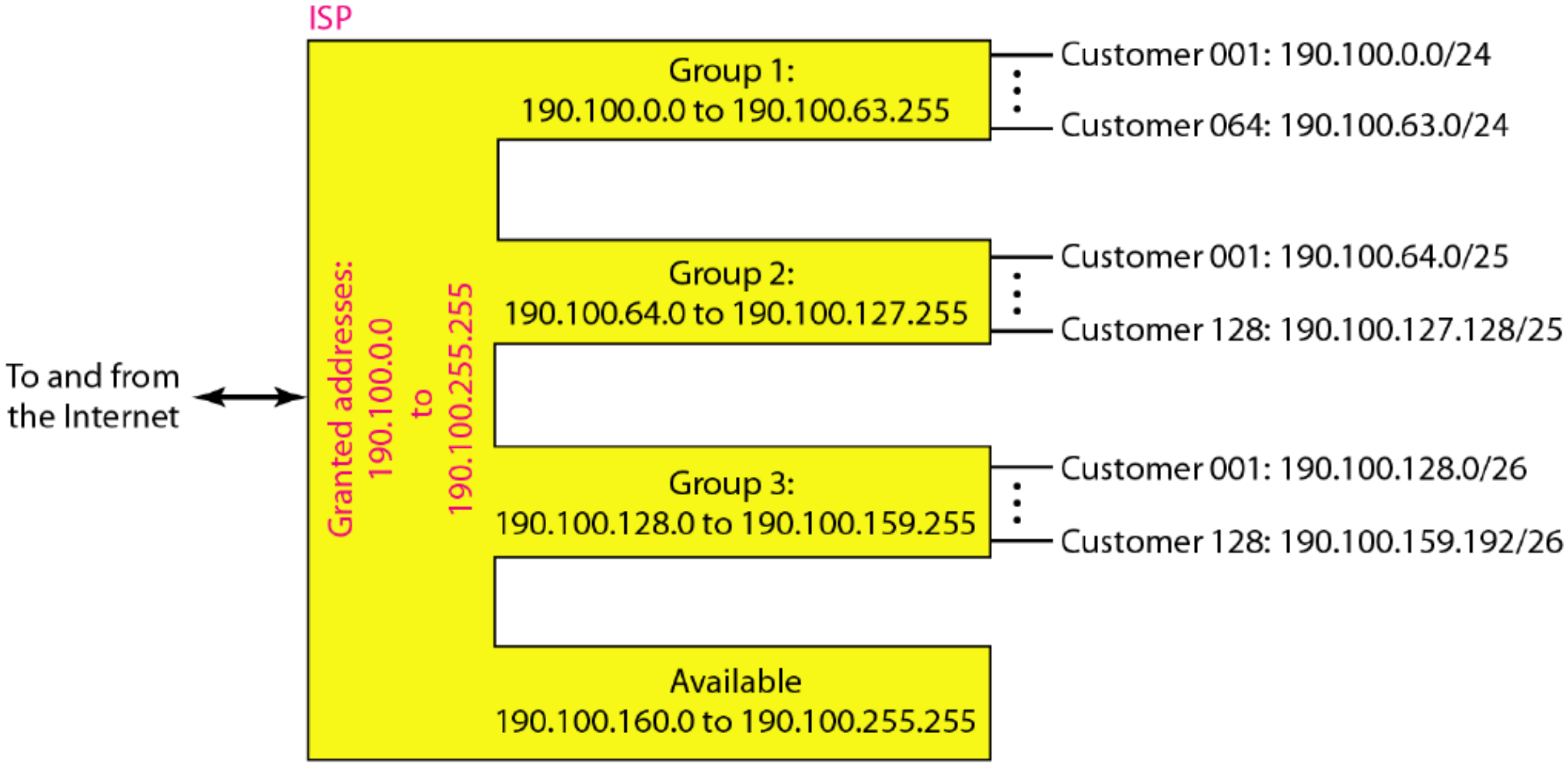
ISP
Granted addresses:
190.100.0.0
to
190.100.255.255
Group 1:
190.100.0.0 to 190.100.63.255
Customer 001: 190.100.0.0/24
Customer 064: 190.100.63.0/24
Group 2:
190.100.64.0 to 190.100.127.255
Customer 001: 190.100.64.0/25
Customer 128: 190.100.127.128/25
Group 3:
190.100.128.0 to 190.100.159.255
Customer 001: 190.100.128.0/26
Customer 128: 190.100.159.192/26
Available
190.100.160.0 to 190.100.255.255
To and from
the Internet

NAT: network address translation

- It is a method to modify network address information in IP packet headers while they are in transit across a router.
- Main purpose is to remap one IP address space into another, typically to enable private (internal) networks to communicate with external public networks, such as the Internet.

Key Functions of NAT

- **IP Address Conservation:** NAT allows multiple devices on a local network to share a single public IP address. This is especially important given the limited availability of IPv4 addresses.
- **Security:** NAT helps hide the internal structure of a network by masking private IP addresses behind a single public IP address, adding a layer of protection against external threats.
- **Connection Routing:** NAT keeps track of active connections and routes the incoming responses to the correct device inside the private network.

Types of NAT

- **Static NAT:** Maps one private IP address to one public IP address. It is typically used for scenarios where the internal device (like a web server) needs to be accessible from outside.
- **Dynamic NAT:** Maps a private IP address to any available public IP address from a pool of public IP addresses.
- **PAT (Port Address Translation) or NAT Overload:** PAT allows multiple devices on a local network to be mapped to a single public IP address but with a unique port number for each connection. This allows many-to-one translation, where several internal IP addresses share one external IP.

How NAT works?

1. A device on a private network (e.g., 192.168.1.2) sends a packet to an external network (e.g., the internet).
2. The NAT-enabled router changes the source IP address from the private one to the router's public IP address before sending it to the internet.
3. When the response from the external network comes back, the NAT router checks its table, replaces the public IP address with the correct private IP address, and forwards it to the original sender inside the network.

NAT: network address translation

NAT: all devices in local network share just one IPv4 address as far as outside world is concerned

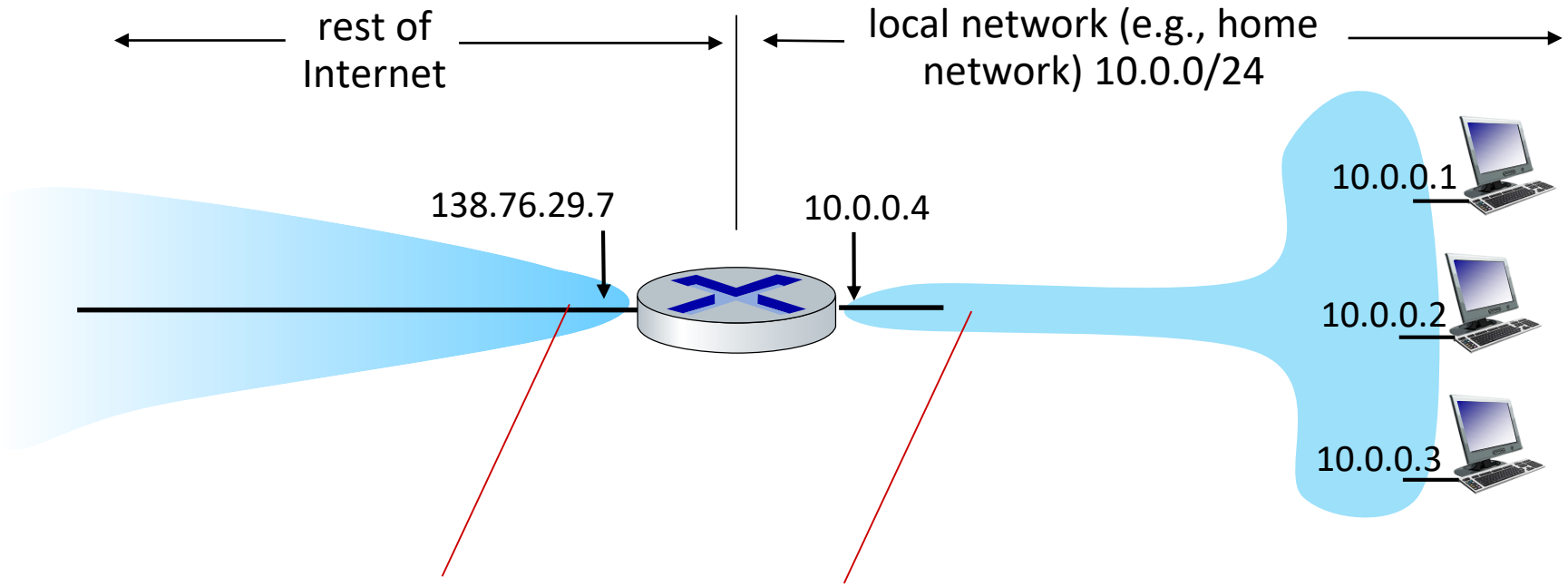

all datagrams *leaving* local network have *same* source NAT IP address: 138.76.29.7, but *different* source port numbers

datagrams with source or destination in this network have 10.0.0/24 address for source, destination (as usual)

NAT: network address translation

- all devices in local network have 32-bit addresses in a “private” IP address space (10/8, 172.16/12, 192.168/16 prefixes) that can only be used in local network
- advantages:
  - just one IP address needed from provider ISP for *all* devices
  - can change addresses of host in local network without notifying outside world
  - can change ISP without changing addresses of devices in local network
  - security: devices inside local net not directly addressable, visible by outside world

NAT: network address translation

implementation: NAT router must (transparently):

- outgoing datagrams: replace (source IP address, port #) of every outgoing datagram to (NAT IP address, new port #)
  - remote clients/servers will respond using (NAT IP address, new port #) as destination address
- remember (in NAT translation table) every (source IP address, port #) to (NAT IP address, new port #) translation pair
- incoming datagrams: replace (NAT IP address, new port #) in destination fields of every incoming datagram with corresponding (source IP address, port #) stored in NAT table

NAT: network address translation

2: NAT router changes datagram source address from 10.0.0.1, 3345 to 138.76.29.7, 5001, updates table

NAT translation table	
WAN side addr	LAN side addr
138.76.29.7, 5001	10.0.0.1, 3345
……	……

1: host 10.0.0.1 sends datagram to 128.119.40.186, 80

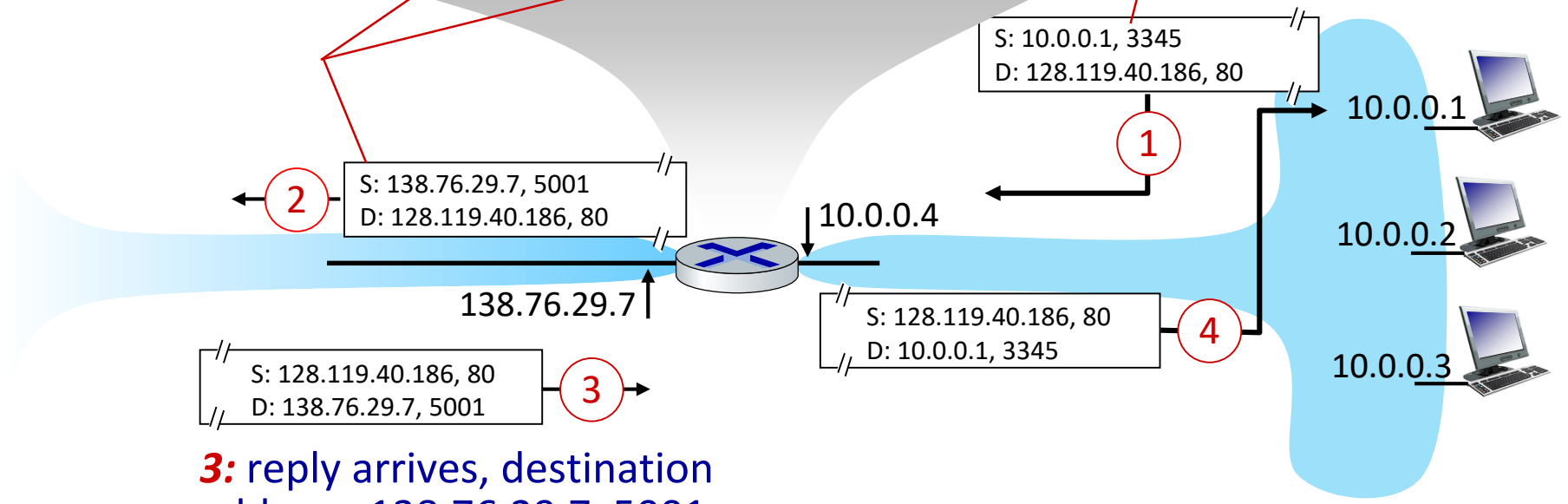

3: reply arrives, destination address: 138.76.29.7, 5001

NAT: network address translation

- NAT has been controversial:
  - routers “should” only process up to layer 3
  - address “shortage” should be solved by IPv6
  - violates end-to-end argument (port # manipulation by network-layer device)
  - NAT traversal: what if client wants to connect to server behind NAT?
- but NAT is here to stay:
  - extensively used in home and institutional nets, 4G/5G cellular nets

Network Layer Fragmentation

- Fragmentation is the process of breaking down large IP packets into smaller pieces, called fragments, so that they can pass through networks that have a maximum transmission unit (MTU) smaller than the original packet size.
- Different network segments (like Ethernet, Wi-Fi, etc.) may have different MTU sizes. The MTU refers to the largest size of a packet that can be transmitted in one go on a specific link.
  - e.g., if an IP packet of 2000 bytes needs to travel through a network with an MTU of 1500 bytes, it must be split into smaller fragments that can each fit within the MTU size.
- Each fragment becomes its own IP packet with updated headers and is sent separately. The fragments are reassembled into the original packet by the receiving host.

IPv4 Fragmentation?

- Routers along the path can fragment packets if needed.
- Each fragment has the same IP header as the original, but with modifications to the following fields:
  - **Identification:** A unique value assigned to each packet so that the fragments can be identified and reassembled at the destination.
  - **Fragment Offset:** Indicates the position of the fragment in the original packet.
  - **More Fragments (MF) Flag:** Set to 1 for all fragments except the last one.Total Length: Specifies the size of the current fragment.

Example

- Suppose a host needs to send a 4000-byte packet, and the MTU of the network link is 1500 bytes. How the fragmentation will be done?
- The total header size is 20 bytes (IPv4 header without options), so the effective payload that can be sent in each fragment is 1500−20=1480 bytes.
- The original packet is split into fragments as follows:
  - Fragment 1: Contains bytes 0 to 1479 (1480 bytes) with the MF flag set to 1.
  - Fragment 2: Contains bytes 1480 to 2959 (1480 bytes) with the MF flag set to 1.
  - Fragment 3: Contains bytes 2960 to 3999 (1040 bytes) with the MF flag set to 0 (indicating the last fragment).
  - The destination reassembles the fragments based on the Identification and Fragment Offset fields.

DHCP

- It is a network management protocol.
- Used on IP networks to automatically assign IP addresses and other network configuration parameters (to devices to enable them to communicate on a network). Following parameters may be set:
  - subnet mask
  - default gateway
  - DNS server

Key Functions of DHCP

- **Automatic IP Address Assignment:** DHCP automatically assigns IP addresses from a predefined pool (scope) of addresses to devices (known as clients) as they connect to the network.
- **Configuration of Network Parameters:** In addition to assigning IP addresses, DHCP configures other critical network settings, such as Subnet mask, Default gateway (the router's IP)DNS server addresses, Lease duration (how long the IP address is valid for)
- **Centralized Management:** With DHCP, network administrators can manage IP address allocation and configuration centrally on a DHCP server, rather than manually configuring each device.

IPv6: motivation

- initial motivation: 32-bit IPv4 address space would be completely allocated
- additional motivation:
  - speed processing/forwarding: 40-byte fixed length header
  - enable different network-layer treatment of “flows”

IPv6 datagram format

priority: identify priority among datagrams in flow

128-bit IPv6 addresses

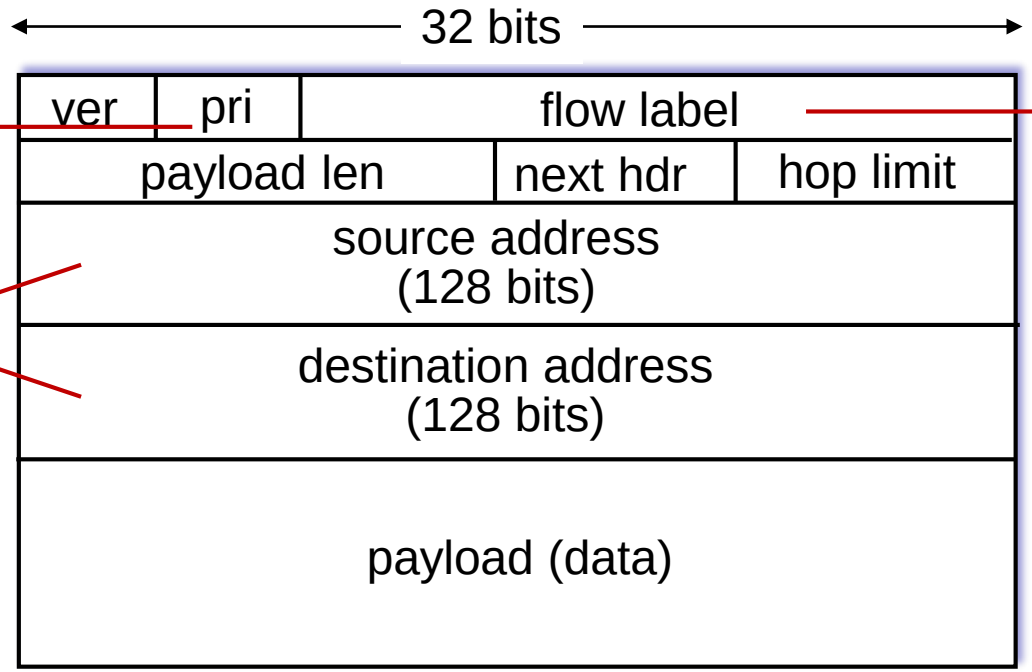

flow label: identify datagrams in same "flow." (concept of "flow" not well defined).

What's missing (compared with IPv4):

- no checksum (to speed processing at routers)
- no fragmentation/reassembly
- no options (available as upper-layer, next-header protocol at router)

Transition from IPv4 to IPv6

- not all routers can be upgraded simultaneously
  - no "flag days"
  - how will network operate with mixed IPv4 and IPv6 routers?
- tunneling: IPv6 datagram carried as *payload* in IPv4 datagram among IPv4 routers ("packet within a packet")
  - tunneling used extensively in other contexts (4G/5G)

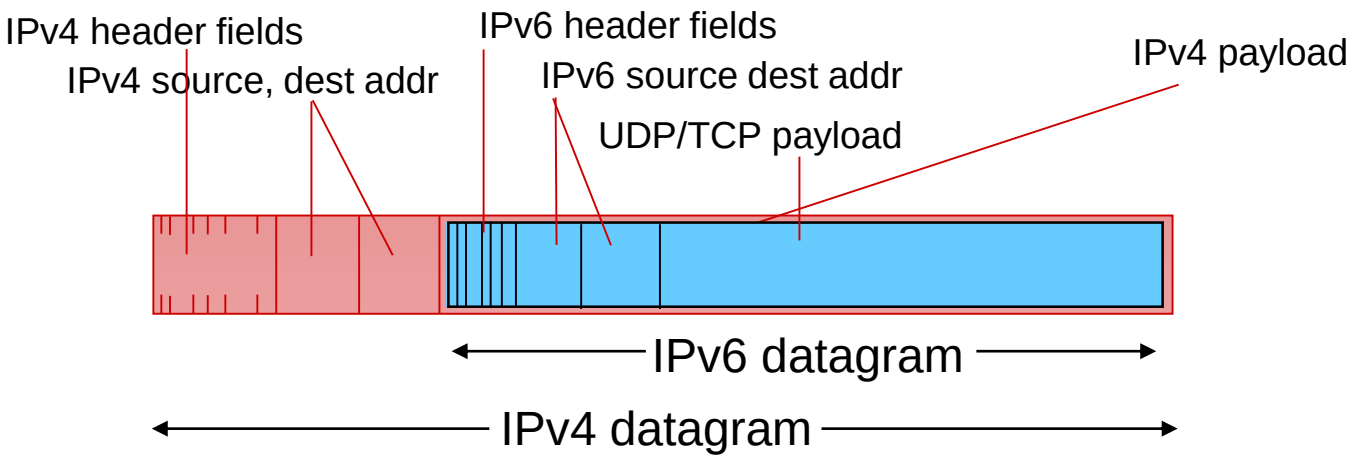

Tunneling and encapsulation

Ethernet connecting two IPv6 routers:

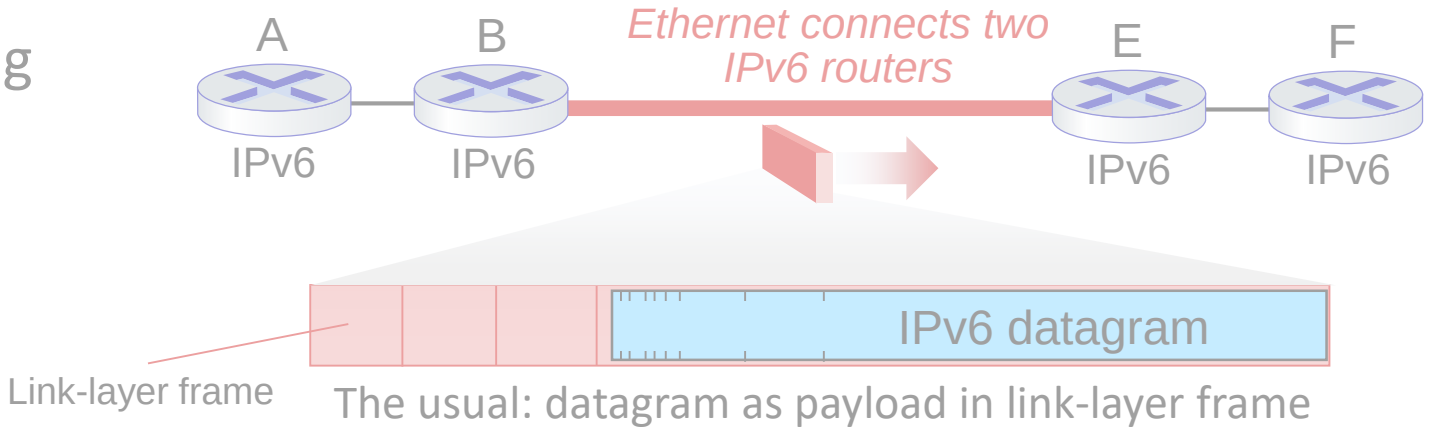

IPv4 network connecting two IPv6 routers

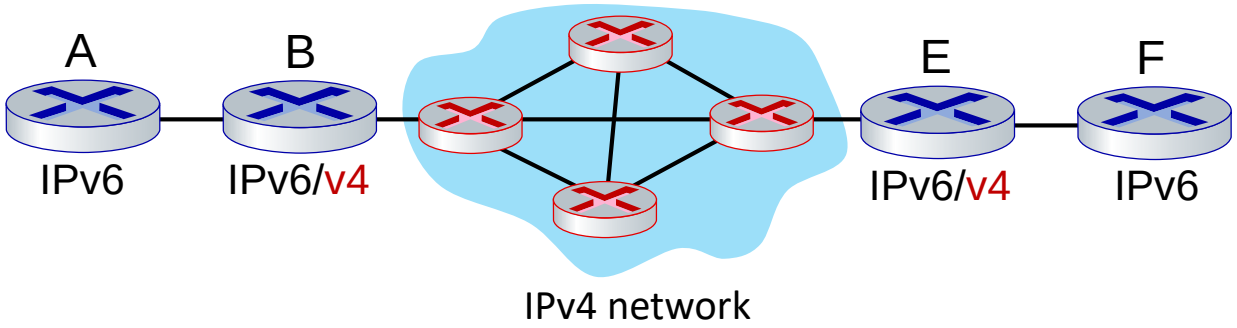

Tunneling and encapsulation

Ethernet connecting two IPv6 routers:

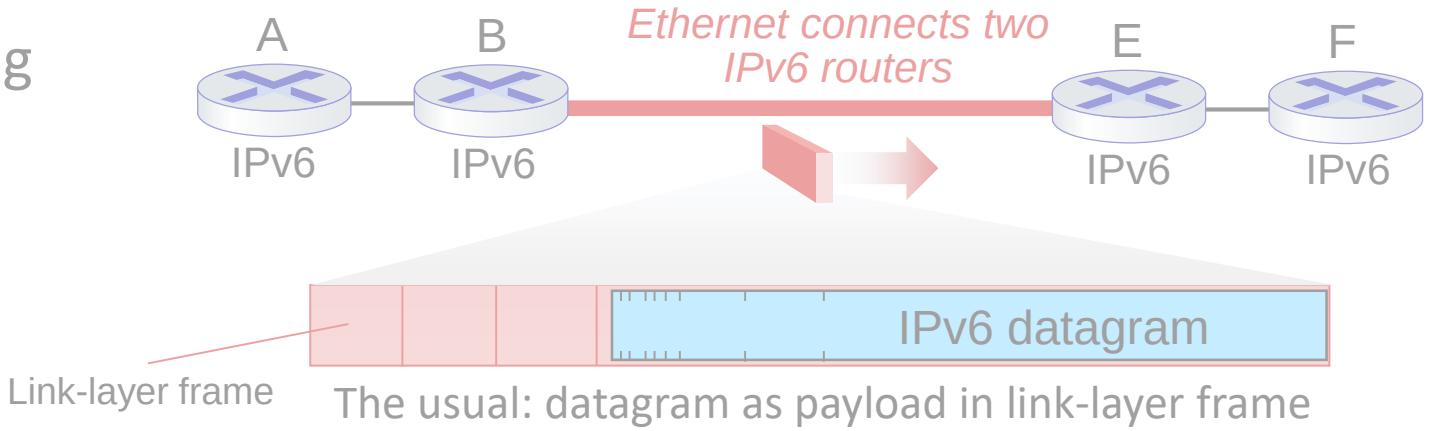

IPv4 tunnel connecting two IPv6 routers

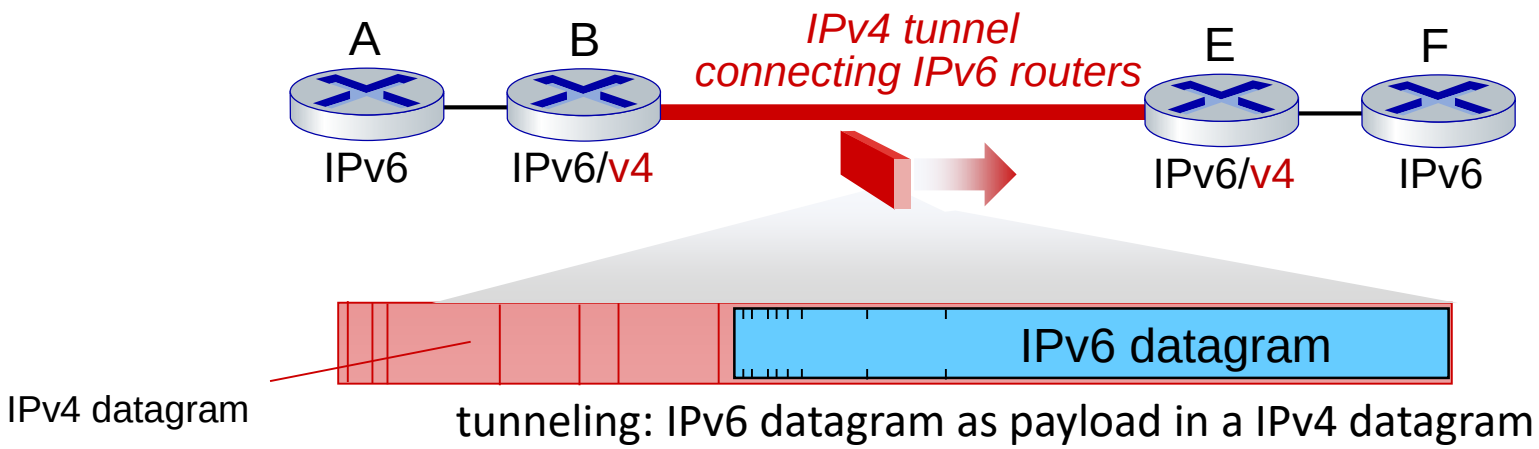

Tunneling

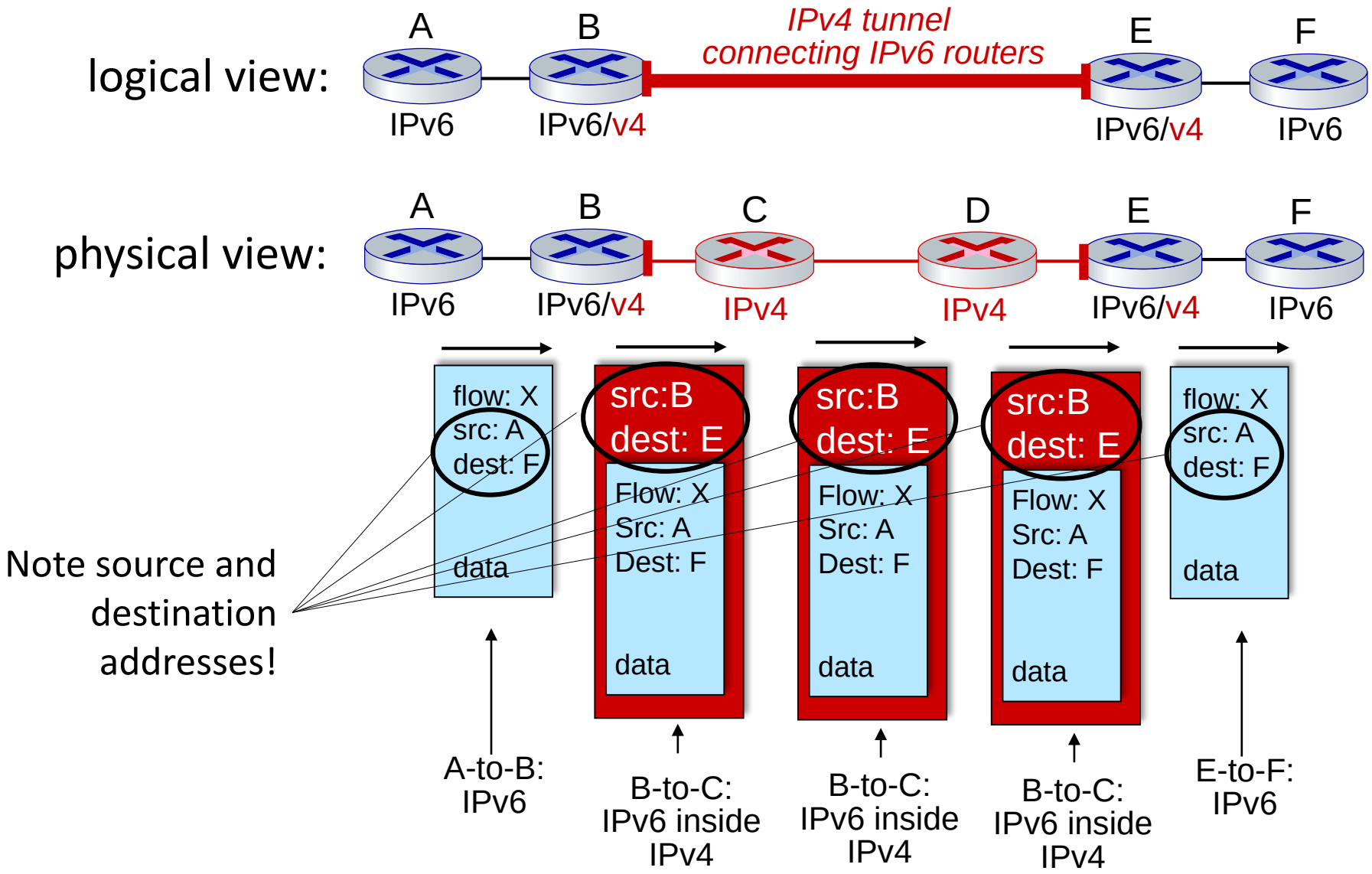
logical view:
A
B
IPv4 tunnel
connecting IPv6 routers
E
F
IPv6
IPv6/v4
IPv6/v4
IPv6
physical view:
A
B
C
D
E
F
IPv6
IPv6/v4
IPv4
IPv4
IPv6/v4
IPv6
flow: X
src: A
dest: F
data
src:B
dest: E
Flow: X
Src: A
Dest: F
data
src:B
dest: E
Flow: X
Src: A
Dest: F
data
src:B
dest: E
Flow: X
Src: A
Dest: F
data
flow: X
src: A
dest: F
data
Note source and destination addresses!
A-to-B: IPv6
B-to-C: IPv6 inside IPv4
B-to-C: IPv6 inside IPv4
B-to-C: IPv6 inside IPv4
E-to-F: IPv6

IPv6: adoption

- Google[1]: ~ 30% of clients access services via IPv6
- NIST: 1/3 of all US government domains are IPv6 capable

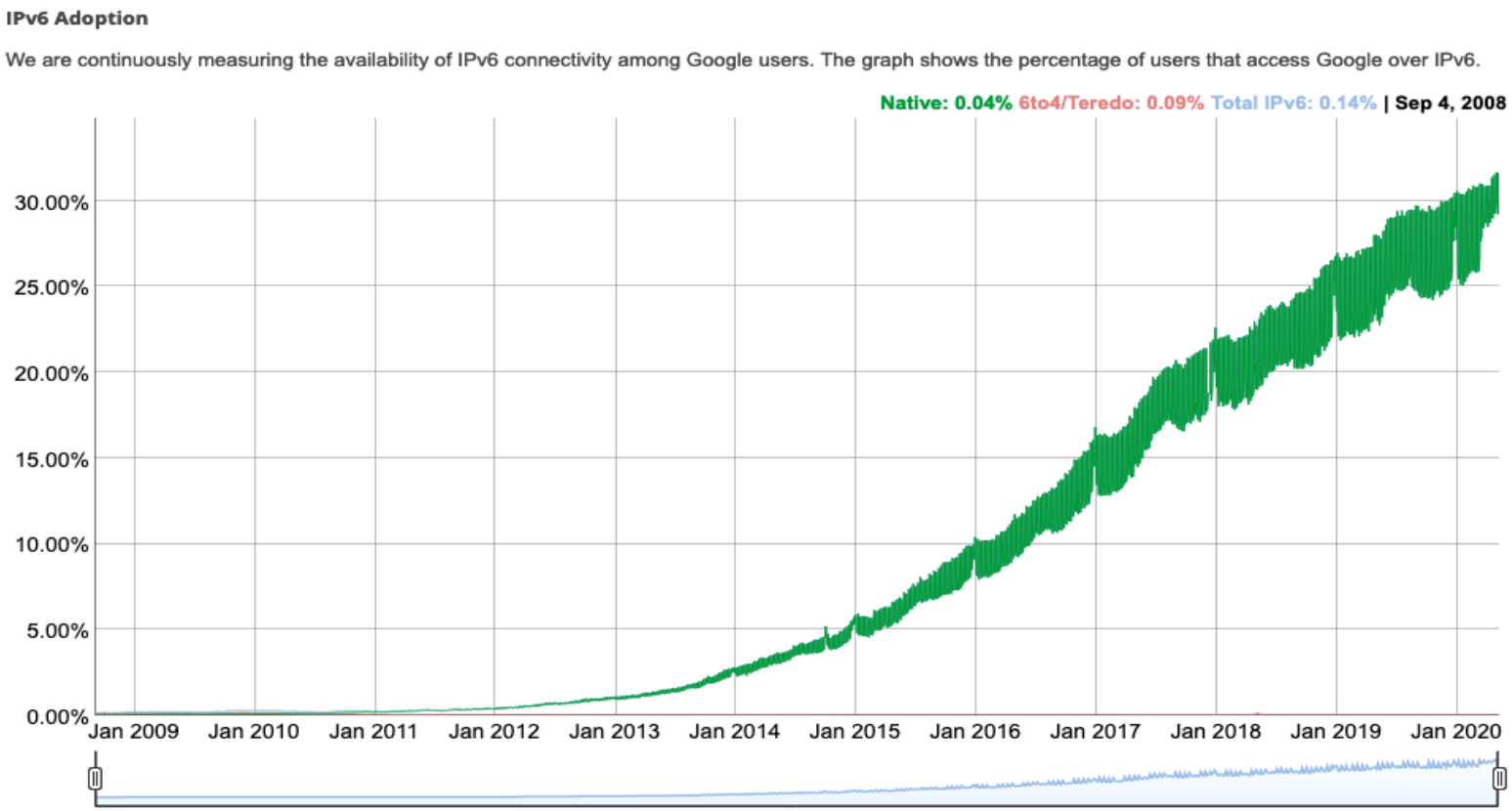

1 https://www.google.com/intl/en/ipv6/statistics.html

IPv6: adoption

- Google[1]: ~ 30% of clients access services via IPv6
- NIST: 1/3 of all US government domains are IPv6 capable
- Long (long!) time for deployment, use
  - 25 years and counting!
  - think of application-level changes in last 25 years: WWW, social media, streaming media, gaming, telepresence, …
  - *Why?*

[1] https://www.google.com/intl/en/ipv6/statistics.html
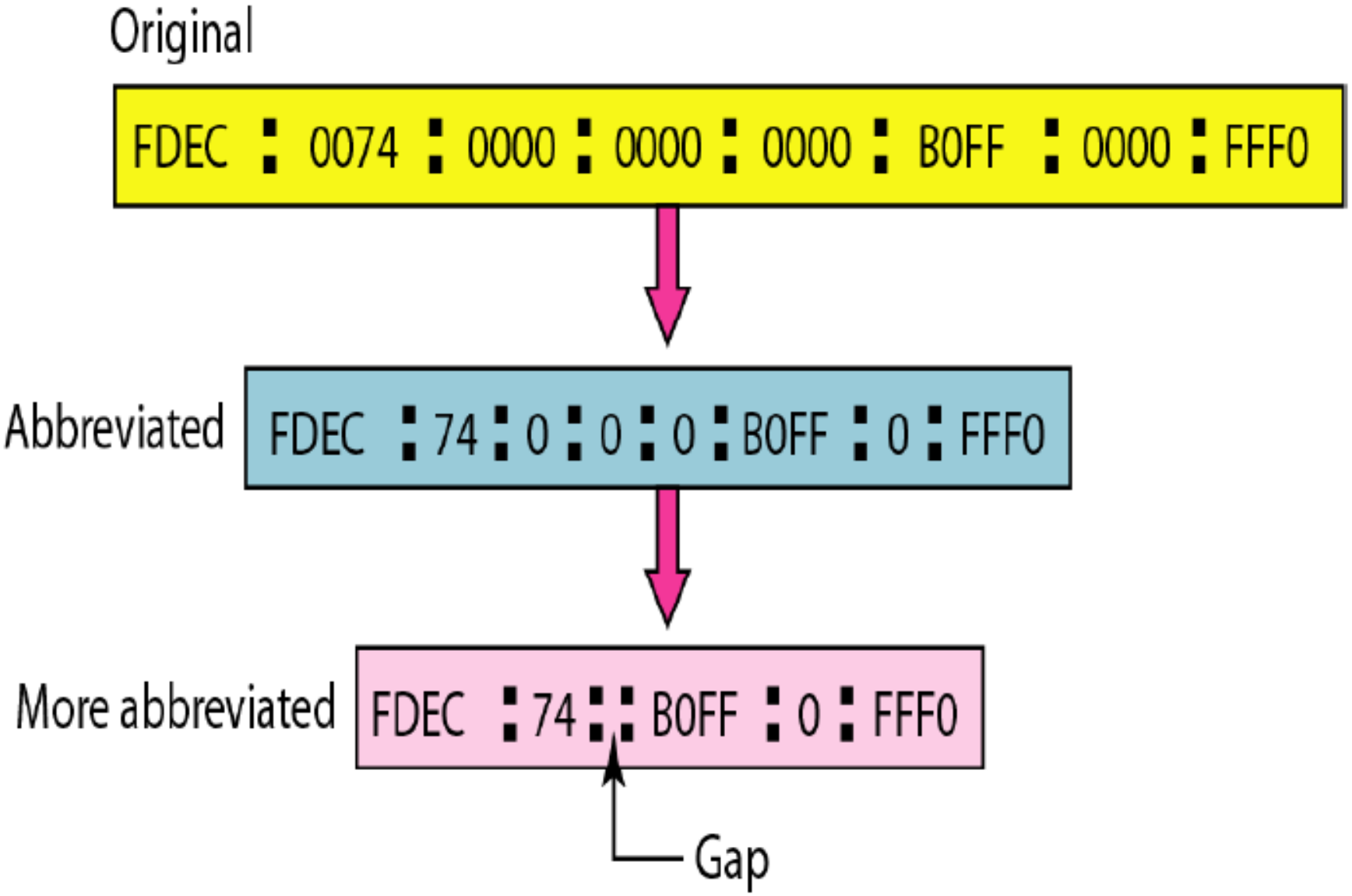
Abbreviated IPv6 addresses